GYFC2 Controller

Top Analogue Performance Controller for GY transducer

GYFC2 controller enjoys the top analogue performance.

GYcRP, GYcRS, GYMR5 and GYFRS probes can be associated with this controller.

Monitoring cable-disconnect and magnet-drop are standard features of GYFC2. Velocity output is optional.

Specifications

Resolution (position output)	0.005%FS (Probe : GYcRS、GYMR5、GYFRS)
	0.01%FS (Probe : GYcRP)
Temp drift	±20ppmFS/℃
Position (OUT1)	0～10V (output current : Max.5mA、load : Min.2kΩ)
Output (OUT2)	4～20mA (load : Min.500Ω) or inverted output etc
Velocity output (OUT2) (Option)	±10V (Resolution : 1%FS)
Alarm output	Contact 1A 30VDC (Cable disconnection and magnet drop)
Power supply	+24VDC±5% (＜350mA) (Note1)
Frequency resp.	Std 1kHz (depending on stroke) Sampling
Operating Temp	0℃～+60℃
Storage Temp	−20℃～+85℃

・The above mentioned accuracy applies to sensors with an effective stroke of 300mm or more.

・Zero/full sacle adjust in ±3%FS can be possible by trimmer equipped.

(Note1) Optionally, user can select the following power supply.

±15VDC type : +15V (±5%) ＜200mA、−15V (±5%) ＜100mA

+12VDC type : +12V (±5%) ＜700mA

Dimensions

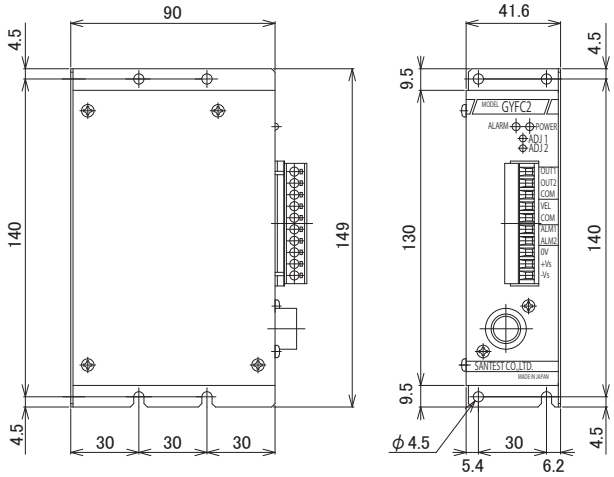

Model No.

GYFC2-□-□□□□-Z□-□-□-□-□

① ② ③ ④ ⑤ ⑥ ⑦

①Probe
- RS : GYcRS probe
- RP : GYcRP probe
- R5 : GYMR5 probe
- FS : GYFRS probe

②Effective stroke (mm)

③Dead zone length of probe head side (mm)

④Analogue position output

	Output1 (OUT1)	Output2 (OUT2)
A	0～10V	10～0V
BD	0～10V	4～20mA
BR	10～0V	20～4mA
CB□□ (bipolar output) [ex] CB10 CB5	−□□V～+□□V −10V～+10V −5V～+5V	+□□V～−□□V +10V～−10V +5V～−5V
VD Z/F [ex] VD1/5 VD0.5/9.5	customer's request 1V～5V 0.5V～9.5V	
VR Z/F [ex] VR5/1 VR9.5/0.5		custom order 5V～1V 9.5V～0.5V
I Z/F [ex] I5.12/19.34 I20/5.38		custom order 5.12mA～19.34mA 20.00mA～5.38mA

※Z=zero point
F=full scale point

⑤Power supply
- 24S : +24VDC (Standard)
- 15W : ±15VDC (Option)
- 12S : +12VDC (Option)

⑥Magnet and Float

M0	: No.Φ magnet	F28S	: Φ28SS316 float
M0SM	: No.ΦSPM magnet	F30S	: Φ30SS316 float
M0LM	: No.ΦLPM magnet	F40S	: Φ40SS316 (B) float
M2P	: No.2P magnet	F42S	: Φ42.5SS316 float
M2PN	: No.2PN magnet	F50S	: Φ50SS316 float
M3	: No.3 magnet	F54S	: Φ54SS304 float
M11	: No.11 magnet	F25N	: RF-A10 plastic float
M11N	: No.11N magnet	F28N	: RF-A6 plastic float
T142	: No.T14-M2 magnet	FL□	: other float
T144	: No.T14-M4 magnet		
T162	: No.T16-M2 magnet		
T163	: No.T16-M3 magnet		
MG□	: other magnet		

⑦Option (blank : No option)

Velocity output (Note2)

V[ ] ([ ] : Max speed (mm/sec))

(Note2)

・You can specify max speed within 3%～300%/sec of effective stroke(mm).
(ex : effective stroke=300mm、 9mm/sec～900mm/sec)